Ltr	Qty	Change	Reason/ ECO no	Design	Date Review	Date Appr
a						

SCALE 1:2.5

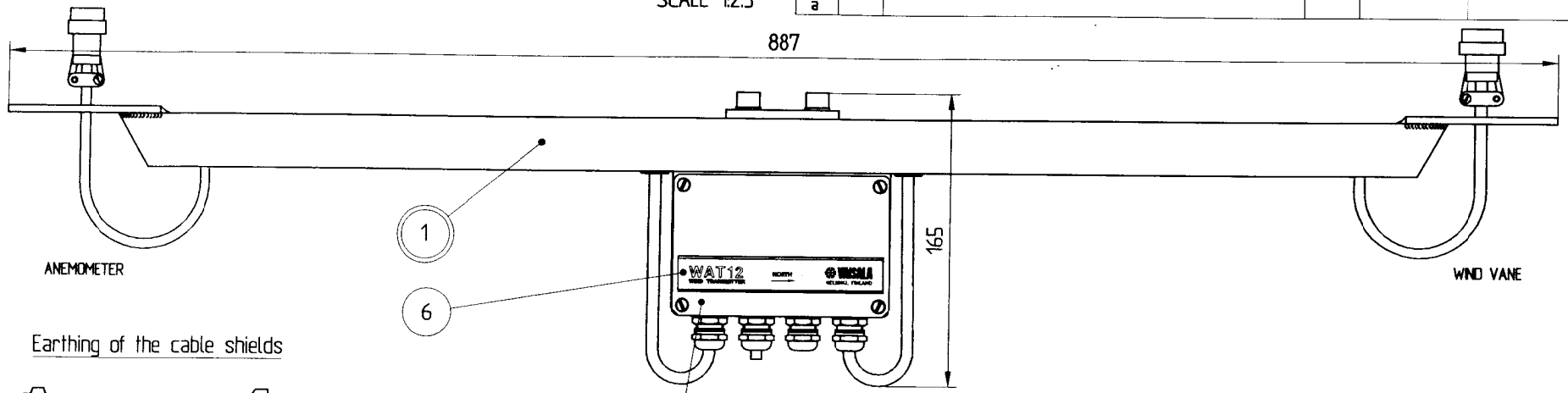

Earthing of the cable shields

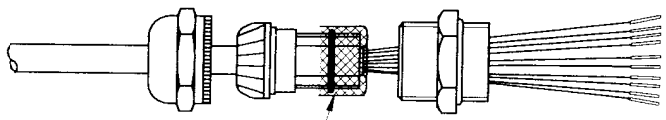

Cable shield bent over the plastic sleeve and O-ring

2

ANEMOMETER

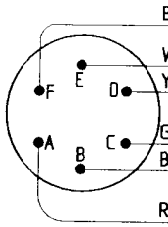

CABLE 6 x 0.22 PFSK

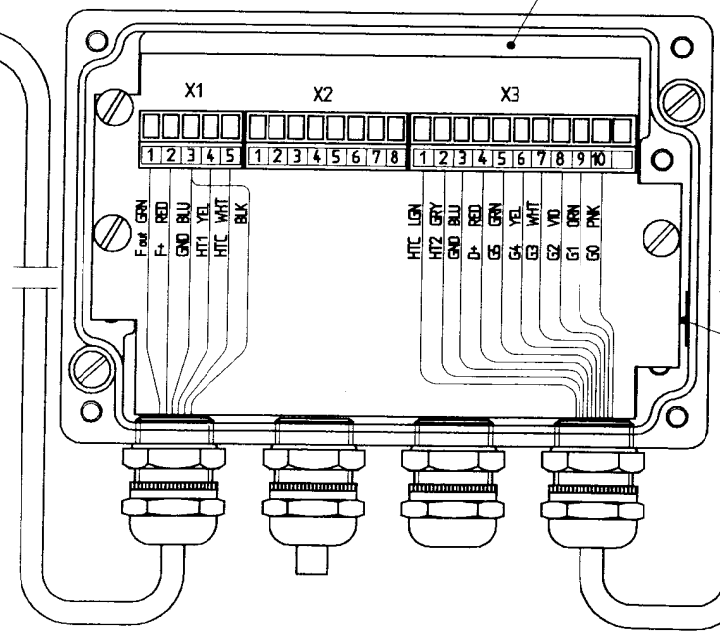

5

WIND VANE

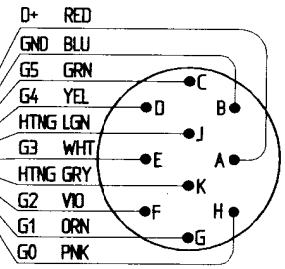

CABLE 12 x 0.22 PFSK

SCALE 1:2.5

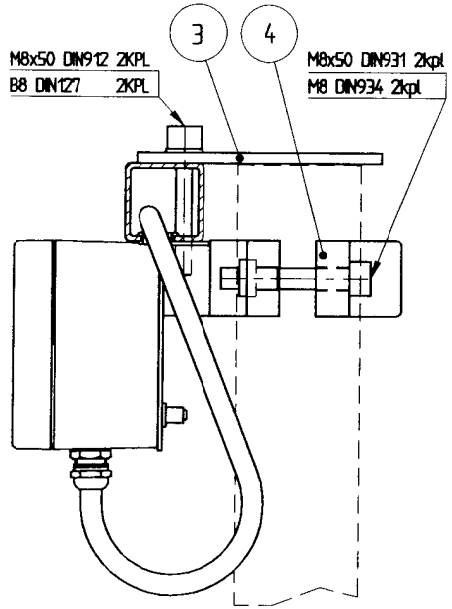

LINE TERMINALS (X2)

HT1	1	HEATING POWER	(40VAC OR VDC)
HT2	2	HEATING POWER	
VN+	3	POWER INPUT/PLUS	
VN+	4	POWER INPUT/PLUS	
VN-	5	POWER INPUT/MINUS	
VN-	6	POWER INPUT/MINUS	
SOP	7	SPEED OUTPUT (against MINUS)	
DOP	8	DIRECTION OUTPUT (against MINUS)	

Drawn 96-01-05 VN	Arch id D	Serial no	Sheet 1/1	Cooperator's doc no	
Review 96-01-09 TP	Title WAT 12 WIND TRANSMITTER ASSEMBLY			VAISALA	
Appr 96-01-10 TPT					
Design VN	Scale 1:1 (1:2.5)			Dwg no WA35142	Rev A
Replaces					
Replaced by					

Tool | pcs | Qty | Work order